SPACECOM CCTV LENSES

HD1166R

[SPECIFICATIONS]

Image Size: 2/3 1/2 1/3

Focal Length :	11 - 66mm
Maximum Relative Aperture :	1:1.8 (Tele End 1:1.8)
Iris :	F1.8 - Close
Zoom Ratio :	6X
Angular Field of View :	43.3 X 33.0 deg. at 11mm 7.7 X 5.8 deg. at 66mm
Image Format :	8.8 X 6.6mm (D11mm)
Minimum Object Distance :	1.4m (From Front Vertex)
Object Dimensions at M.O.D. :	111.1 X 82.9cm at 11mm 18.8 X 14.2cm at 66mm
Optical Back Focal Distance :	15.28mm (In Air)

Flange Back :		17.526mm
Operation :	Zoom :	Motorized(DC+/-6.4V, Max40mA) Speed Approx. 6.5sec
	Focus :	Motorized(DC+/-6.4V, Max40mA) Speed Approx. 6.5sec
	Iris :	Motorized(DC+/-6.4V, Max40mA) Speed Approx. 3.5sec
Operation Temperature :		-10 to +50° C
Mount :		C-Mount (Adjustable Lens Position)
Front Thread :		72mm P0.75
Size, Weight :		84.5X85X120mm, Approx. 700g

[COMPOSITION]

Lens 1
Lens Cap 1
Dust Cap 1

[DIMENSIONS]

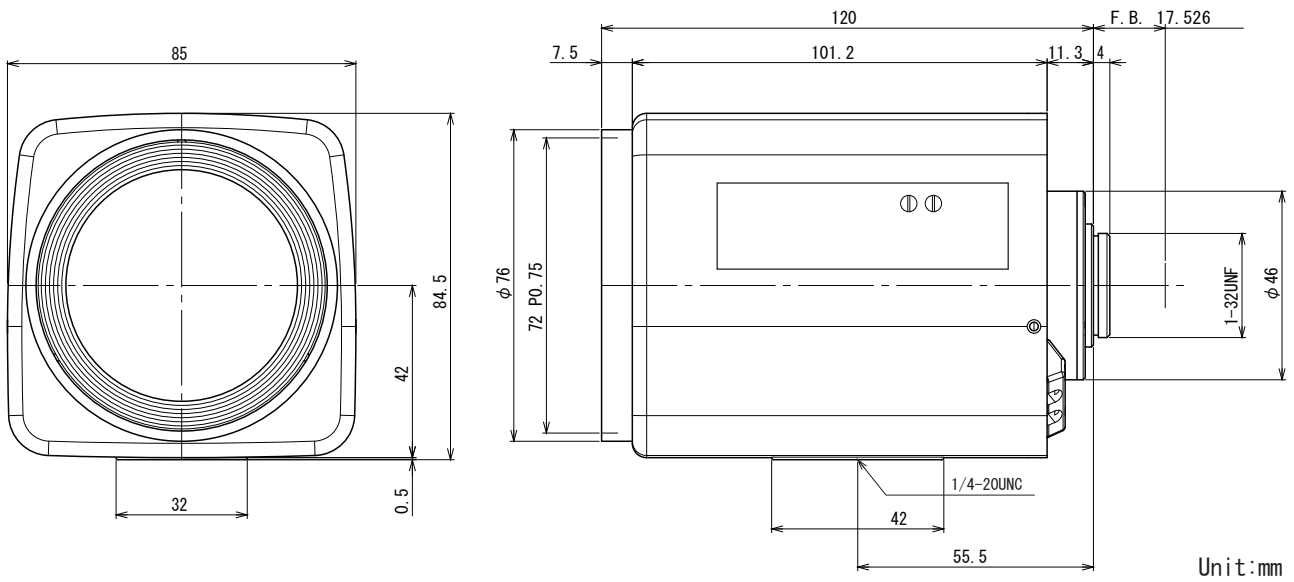

[CIRCUIT DIAGRAM]

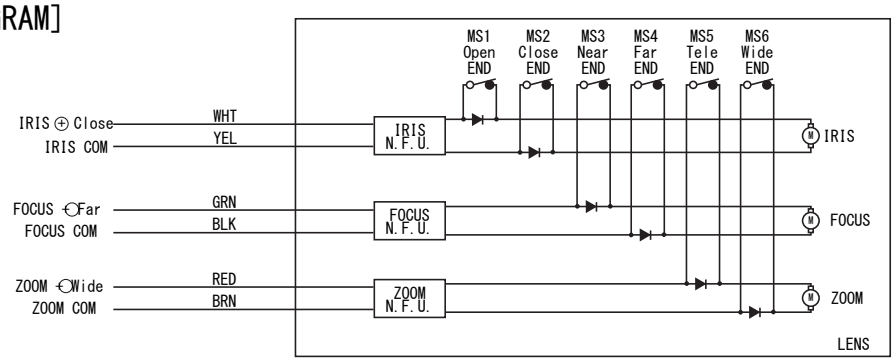

SUBJECT TO CHANGE WITHOUT NOTICE.